MUD MIXER®

ORIGINAL INSTRUCTION MANUAL and ASSEMBLY INSTRUCTIONS

MudMixer • MMXR-3225, MMXR-3225-B, MMXR-2301, MMXR-2302, and MMXR-2303 Date: 5/1/2025

This machine is designed primarily for mixing and distributing bagged concrete and/or mortar products, and is intended for use by contractors, landscapers, fence builders, and residential homeowners in completing professional and homeowner type projects.

Read this information carefully to learn how to operate and maintain your product properly and to avoid injury and product damage.

You are responsible for operating the product properly and safely. You can go to the MudMixer website at www.MudMixer.com for product safety and operation training materials, accessory information, help finding a dealer, or to register your product.

Whenever you need service, genuine MudMixer parts, or additional information, contact an Authorized Service Dealer or MudMixer Customer Service and have the model and serial numbers of your machine available.

Important: *With your mobile device, you can scan the QR code on the front hopper label to access warranty, parts, and other product information.*

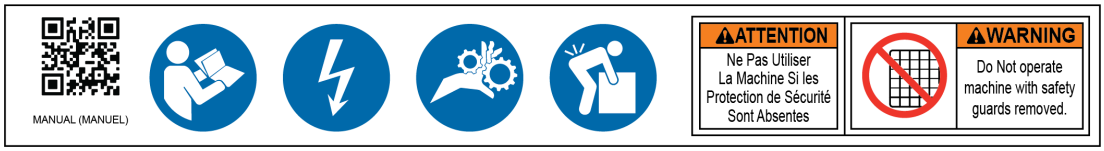

MudMixer® is a registered trademark.

MudMixer Contact Information

Mailing Address:

5109 82nd Street
Suite 7-1215
Lubbock TX 79424
United States

Phone: 806-515-4683

Website: www.MudMixer.com

Table of Contents

Safety Information **4**
Introduction **4**
General Power Tool Safety **4**
Work Area Safety 4
Electrical Safety 4
Personal Safety 4
Power Tool Use and Care 5
Service 5
Prepare for the Job **5**
Safety Notices **6**
Inspect Safety Labels 6
Wear Proper Personal Protective Equipment (PPE) 6
Lifting Safety 7
Auger Safety Guards 7
Electrical Component Safety 7
Safety and Information Label **8**
MMXR-3225, MMXR-3225-B, MMXR-2301, MMXR-2302, and MMXR-2303 8
Nameplate Information 11
Declaration of Conformity **12**
Component Locations **14**
Overall View **14**
Specifications **16**
Assembly **17**
Unpacking **17**
Tools Required **18**
Assembly Steps **18**
Operation **20**
Winter Storage 23
Transporting the MudMixer 23
Operating Problems/Solutions **24**
Maintenance **25**
Lubrication **25**
Solenoid Maintenance **25**
Solenoid Disassembly 25
Solenoid Assembly 25
Unblocking a Blocked Mixing Chute 26
Removing the Auger Guard 26
Cleaning the Motor Grate 27
Power Cord Repairs 27
Warranty **28**
Accessories **29**
Hopper Extension 29
Chute Extension 29
All Weather Cover 29
Installing the Chute Extension 30

Safety Information

Introduction

Safety is an important part of operating any equipment with moving parts. Knowledge of proper operation and safe work habits are essential to preventing death, personal injury, or property damage. Use the following statements as a common-sense guide to proper work and tool-use habits.

General Power Tool Safety

WARNING

Read all safety warnings, instructions, illustrations and specifications provided with this power tool. Failure to follow all instructions provided here may result in electric shock, fire and/or serious injury.

Work Area Safety

a. **Keep work area clean and well lit.** *Cluttered or dark areas invite accidents.*

b. **Do not operate power tools in explosive atmospheres, such as in the presence of flammable liquids, gases or dust.** *Power tools create sparks which may ignite the dust or fumes.*

c. **Keep children and bystanders away while operating a power tool.** *Distractions can cause you to lose control.*

Electrical Safety

a. **Power tool plugs must match the outlet. Never modify the plug in any way. Do not use any adapter plugs with earthed (grounded) power tools**. *Unmodified plugs and matching outlets will reduce risk of electric shock.*

b. **Avoid body contact with earthed or grounded surfaces, such as pipes, radiators, ranges and refrigerators.** *There is an increased risk of electric shock if your body is earthed or grounded.*

c. **Do not expose power tools to rain or wet conditions.** *Water entering a power tool will increase the risk of electric shock.*

d. **Do not abuse the cord. Never use the cord for carrying, pulling or unplugging the power tool. Keep cord away from heat, oil, sharp edges or moving parts.** *Damaged or entangled cords increase the risk of electric shock.*

e. **When operating a power tool outdoors, use an extension cord suitable for outdoor use.** *Use of a cord suitable for outdoor use reduces the risk of electric shock.*

f. **If operating a power tool in a damp location is unavoidable, use a residual current device (RCD) protected supply.** *Use of an RCD reduces the risk of electric shock.*

Personal Safety

a. **Stay alert, watch what you are doing and use common sense when operating a power tool. Do not use a power tool while you are tired or under the influence of drugs, alcohol or medication.** *A moment of inattention while operating power tools may result in serious personal injury.*

b. **Use personal protective equipment. Always wear eye protection.** *Protective equipment such as a dust mask, non-skid safety shoes, hard hat or hearing protection used for appropriate conditions will reduce personal injuries.*

c. **Prevent unintentional starting. Ensure the switch is in the off-position before connecting to power source and/or battery pack, picking up or carrying the tool.** *Carrying power tools with your finger on the switch or energizing power tools that have the switch on invites accidents.*

d. **Remove any adjusting key or wrench before turning the power tool on.** *A wrench or a key left attached to a rotating part of the power tool may result in personal injury.*

e. **Do not overreach. Keep proper footing and balance at all times.** *This enables better control of the power tool in unexpected situations.*

f. **Dress properly. Do not wear loose clothing or jewelry. Keep your hair and clothing away from moving parts.** *Loose clothes, jewelry or long hair can be caught in moving parts.*

g. **If devices are provided for the connection of dust extraction and collection facilities, ensure these are connected and properly used.** *Use of dust collection can reduce dust-related hazards.*

h. **Do not let familiarity gained from frequent use of tools allow you to become complacent and ignore tool safety principles.** *A careless action can cause severe injury within a fraction of a second.*

Power Tool Use and Care

a. **Do not force the power tool. Use the correct power tool for your application.** T*he correct power tool will do the job better and safer at the rate for which it was designed.*

b. Do not use the power tool if the switch does not turn it on and off. Any power tool that cannot be controlled with the switch is dangerous and must be repaired.

c. Disconnect the plug from the power source from the power tool before making any adjustments, changing accessories, or storing power tools. Such preventive safety measures reduce the risk of starting the power tool accidentally.

d. **Store idle power tools out of the reach of children and do not allow persons unfamiliar with the power tool or these instructions to operate the power tool**. *Power tools are dangerous in the hands of untrained users.*

e. **Maintain power tools and accessories. Check for misalignment or binding of moving parts, breakage of parts and any other condition that may affect the power tool's operation. If damaged, have the power tool repaired before use.** *Many accidents are caused by poorly maintained power tools.*

f. **Keep cutting tools sharp and clean.** *Properly maintained cutting tools with sharp cutting edges are less likely to bind and are easier to control.*

g. **Use the power tool, accessories and tool bits etc. in accordance with these instructions, taking into account the working conditions and the work to be performed.** *Use of the power tool for operations different from those intended could result in a hazardous situation*.

h. **Keep handles and grasping surfaces dry, clean and free from oil and grease.** *Slippery handles and grasping surfaces do not allow for safe handling and control of the tool in unexpected situations*.

Service

a. **Have your power tool serviced by a qualified repair person using only identical replacement parts.** *This will ensure that the safety of the power tool is maintained.*

Prepare for the Job

Preparation is essential to complete a procedure in a safe and efficient manner.

- Wear proper clothing. Loose or baggy clothing could become entangled in moving parts.
- Cover and protect long hair to prevent it from getting caught in machine parts.
- Use eye/face protection. Always use proper eye/face protection to protect your eyes from flying debris or splatters.
- Wear protective footwear. Wear safety shoes (steel-toe) to protect your feet from falling objects.
- Hearing protection is recommended when operating this equipment.
- Use gloves when handling parts. Parts may have sharp edges or may be hot.
- Remove jewelry prior to servicing electrical components.
- Prepare proper tools and equipment. Always use the correct tool for the job. Improper or homemade tools can cause injury or machine damage.
- Prepare needed parts and materials. Gather the needed parts and materials before starting.
- Prepare proper work-space lighting. A well-lit work area can make the job easier.
- Follow procedures and safety warnings. Service procedures are written to be as safe and efficient as possible. Never take shortcuts.
- Be prepared for emergencies. Accidents can happen, even under the best conditions. First aid kits should be well maintained and easily accessible.
- Follow the instructions and warnings on any mix bags. Make sure to wear the proper personal protective equipment when mixing concrete. This includes a dust mask, safety goggles, and work gloves.

Safety Notices

Throughout this manual, the following key safety words will be used to alert the reader of potential hazards. Become familiar with these words and their meaning. Take all precautions to avoid the hazards described.

This safety alert symbol is used to alert you to important safety precautions.

DANGER

Indicates an imminently hazardous situation which, if not avoided, will result in death or serious bodily injury.

WARNING

Indicates a potentially hazardous situation which, if not avoided, may result in serious or moderate bodily injury.

CAUTION

Indicates a potentially hazardous situation which, if not avoided, may result in minor or moderate bodily injury.

NOTICE

Indicates a situation which, if not followed, may involve deterioration or damage to equipment.

Inspect Safety Labels

Safety labels are important to the safe operation of the machine. Replace any damaged, missing, or unreadable labels before placing the machine back in service.

Wear Proper Personal Protective Equipment (PPE)

Eye and Face Protection

WARNING

Always use approved eye and face personal protection equipment. Failure to use appropriate protective equipment could result in serious injury.

Always wear eye protection while operating.

- **Safety Glasses:** Minimum level of protection from flying debris.
- **Face Shields:** Face shields are often used along with safety glasses to offer a higher level of protection when flying debris is present.
- **Vented Goggles:** Side protection not offered by safety glasses alone.
- **Unvented Goggles:** Protection from splashes and dust.

Exposed Skin Protection

CAUTION

Prolonged contact with wet concrete can result in severe skin irritation or chemical burns. Always wear waterproof clothing on body parts that come into prolonged contact with concrete.

Protect skin exposed to concrete:

- Waterproof gloves
- Rubber boots
- Long-sleeved shirt and long pants

Lifting Safety

Lifting of the Mudmixer (145 lbs/66 kg) requires two or more people.

CAUTION

Assistance is required when lifting the MudMixer. Use proper lifting techniques to prevent muscle strain or other back injuries.

Auger Safety Guards

WARNING

The auger safety guards (1), (2), and (3) help protect you from contact with the auger. Always keep hands away from the auger, don't rely on the guards to protect you from injury. Failure to keep hands clear of the auger may result in serious injury.

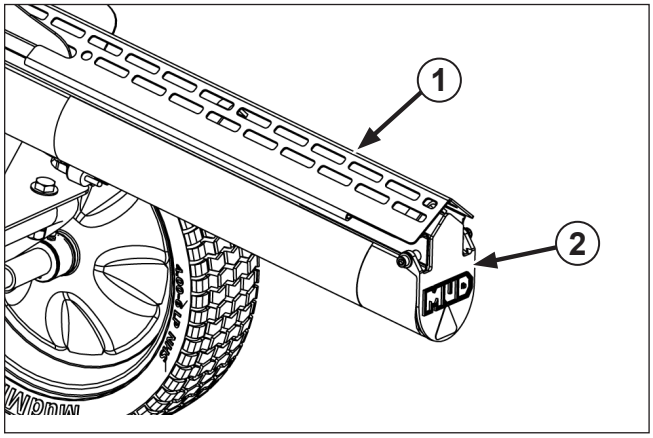

Figure 1. Chute Auger Guards

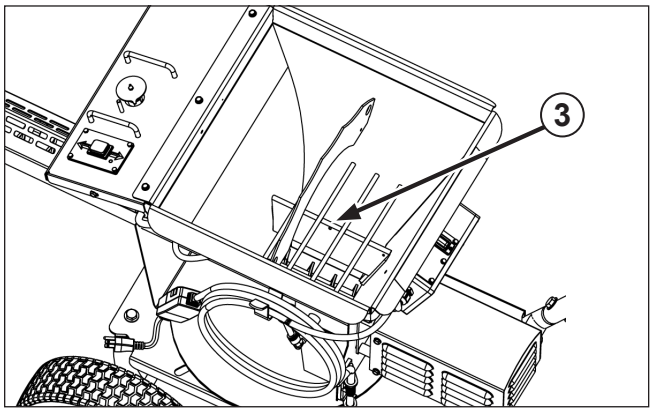

Figure 2. Hopper Auger Guard

Electrical Component Safety

WARNING

Always disconnect all sources of supply voltage before servicing. Failure to follow can result in electrical shock and can cause injury or death.

- Before servicing any MudMixer components, disconnect all power supply sources.
- Ensure appropriate PPE is worn while servicing components.
- The unplugged power cord must remain under direct control of the service person to prevent accidental operation.

Safety and Information Label

MMXR-3225, MMXR-3225-B, MMXR-2301, MMXR-2302, and MMXR-2303

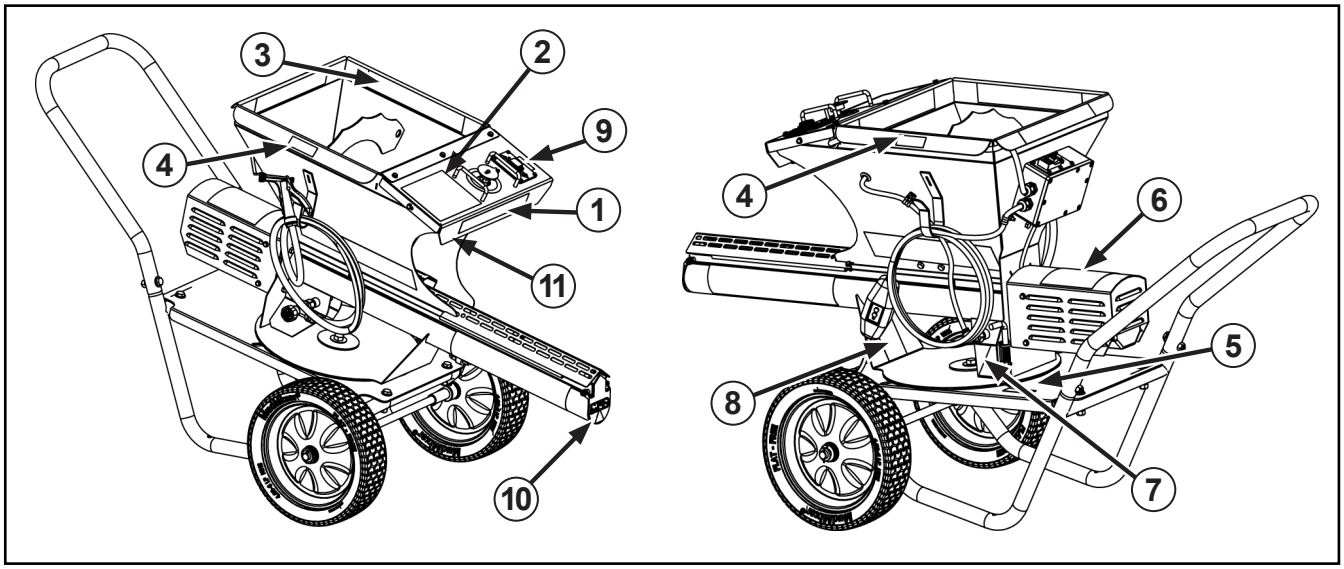

Figure 3. Safety and Information Labels

Read and understand the safety labels on your mixer prior to operation. Damaged safety labels should be replaced, contact MudMixer Inc. to order new labels. The following labels are used on the mixer:

1	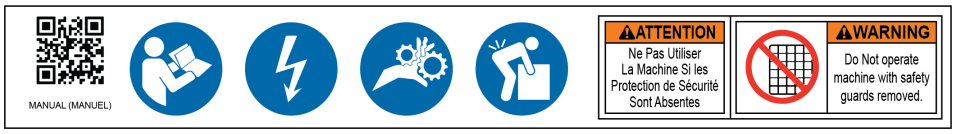	
	MANUAL (MANUEL)	**QR Code** Scan this code with your phone to access the online copy of this manual.
		Read the Manual Read the contents of this manual before attempting to operate or service the MudMixer.
		Electrical Precautions Observe precautions to prevent electrical shock.
		Crush Hazard Be aware pinch and crush points. Keep hands clear of the auger.
		Lift Safely Two or more people are required to lift the MudMixer to prevent injury.
	ATTENTION Ne Pas Utiliser La Machine Si les Protection de Sécurité Sont Absentes WARNING Do Not operate machine with safety guards removed.	**WARNING** **Do Not Operate with safety guards removed.**

2	**OPERATING INSTRUCTIONS** 1 Ensure installation of both safety auger guards (Hopper and Chute) 2 Connect garden hose (Min 40 PSI recommended) to T-Valve 3 Connect the Grounded Power Cable to power 4 Set the Water Control Dial to desired starting point (35 – 50 recommended for concrete) 5 Press the green Power Switch on the rear of the machine to On (I). 6 Flip the red Auger Switch to "Forward" for 5 seconds to test the water and Auger 7 Pre-wet the chute using the Secondary Hose 8 Using the Concrete Bag Cutter, place the first bag of powder into the Hopper 9 Flip the red Auger Switch to "Forward" to begin mixing concrete 10 Adjust Water Control Dial to achieve desired slump 11 Continue to add bags as necessary, keeping the Hopper 3/4 or more full 12 Utilize the Secondary Hose to: - Increase water delivery when necessary - Thoroughly clean the unit when finished THOROUGHLY CLEAN THE HOPPER, CHUTE, and AUGER WITH PROVIDED SPRAY NOZZLE WITHIN 20 MINUTES OF COMPLETING MIXING PROCESS DO NOT SPRAY WATER DIRECTLY ONTO OR INTO THE MOTOR NE VAPORISEZ PAS D'EAU DIRECTEMENT SUR OU DANS LE MOTEUR	**OPERATING INSTRUCTIONS** An abbreviated list of instructions. See page 20 for complete operating instructions and illustrations. **THOROUGHLY CLEAN THE CHUTE, and AUGER WITH PROVIDED SPRAY NOZZLE WITHIN 20 MINUTES OF COMPLETING MIXING PROCESS.** **DO NOT SPRAY WATER DIRECTLY ONTO OR INTO THE MOTOR**
3	DO NOT SPRAY WATER ON DRY MIX! NE VAPORISEZ PAS D'EAU SUR LE MÉLANGE SEC !	**DO NOT SPRAY WATER ON DRY MIX!** The dry mix must be kept dry to properly feed into the mixing augers.
4	DRY MIX ONLY MÉLANGE SEC UNIQUEMENT	**DRY MIX ONLY** Do not put water into the hopper dry mix. This will prevent proper operation of the mixing augers.
5	PIVOT LATCH LOCK & RELEASE LOQUET PIVOTANT VERROUILLER ET DÉVERROUILLER	**PIVOT LATCH LOCK & RELEASE** The mixer must be locked in its transport position when being moved to prevent unexpected movement of the upper section.
6	DO NOT SPRAY WATER DIRECTLY ONTO MOTOR THIS COVER IS NOT A HANDLE NE PAS PULVÉRISER D'EAU DIRECTEMENT SUR LE MOTEUR CETTE COUVERTURE N'EST PAS UNE POIGNÉE	**DO NOT SPRAY WATER DIRECTLY ONTO MOTOR** **THIS COVER IS NOT A HANDLE.** Although the auger motor is protected against low pressure water and dirt, it is not waterproof. Do not spray higher pressure streams of water directly on the motor. Use a wet rag to clean the motor housing.
7	TO WINTERIZE • DISCONNECT ABOVE HOSE • OPEN SOLENOID BY TURNING SWITCH ON • FULLY OPEN WATER DIAL • BLOW COMPRESSED AIR THROUGH FULLY OPEN SYSTEM SCAN QR CODE FOR DETAILED INSTRUCTIONS	**TO WINTERIZE:** **DISCONNECT ABOVE HOSE** **OPEN SOLENOID BY TURNING SWITCH ON** **FULLY OPEN DIAL** **BLOW COMPRESSED AIR THROUGH FULLY OPEN SYSTEM** **SCAN QR CODE FOR DETAILED INSTRUCTIONS**

Safety and Information Label

8	Nameplate	**See description on Next Page.**
9		**Auger Control Label** **Reverse, stop, and forward auger positions.**
10		**Sharp Edges Symbol** Sharp edges will cut. Keep fingers clear.
11	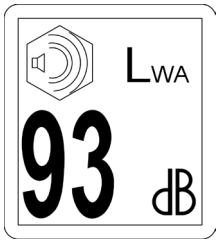	**Sound Warning Label** Hearing protection is required if operating the MudMixer for an extended period of time.
	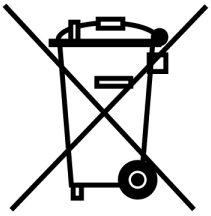	**Waste Electrical and Electronic Equipment (WEEE)** Only on EU (-2301) and UK (-2303) machines, this symbol on the nameplate identifies the MudMixer as requiring separate and special treatment for waste collection, recycling, and disposal.
		Ground Symbol. Used in various locations. Indicates an important electrical grounding point to prevent electrical shock.

Nameplate Information

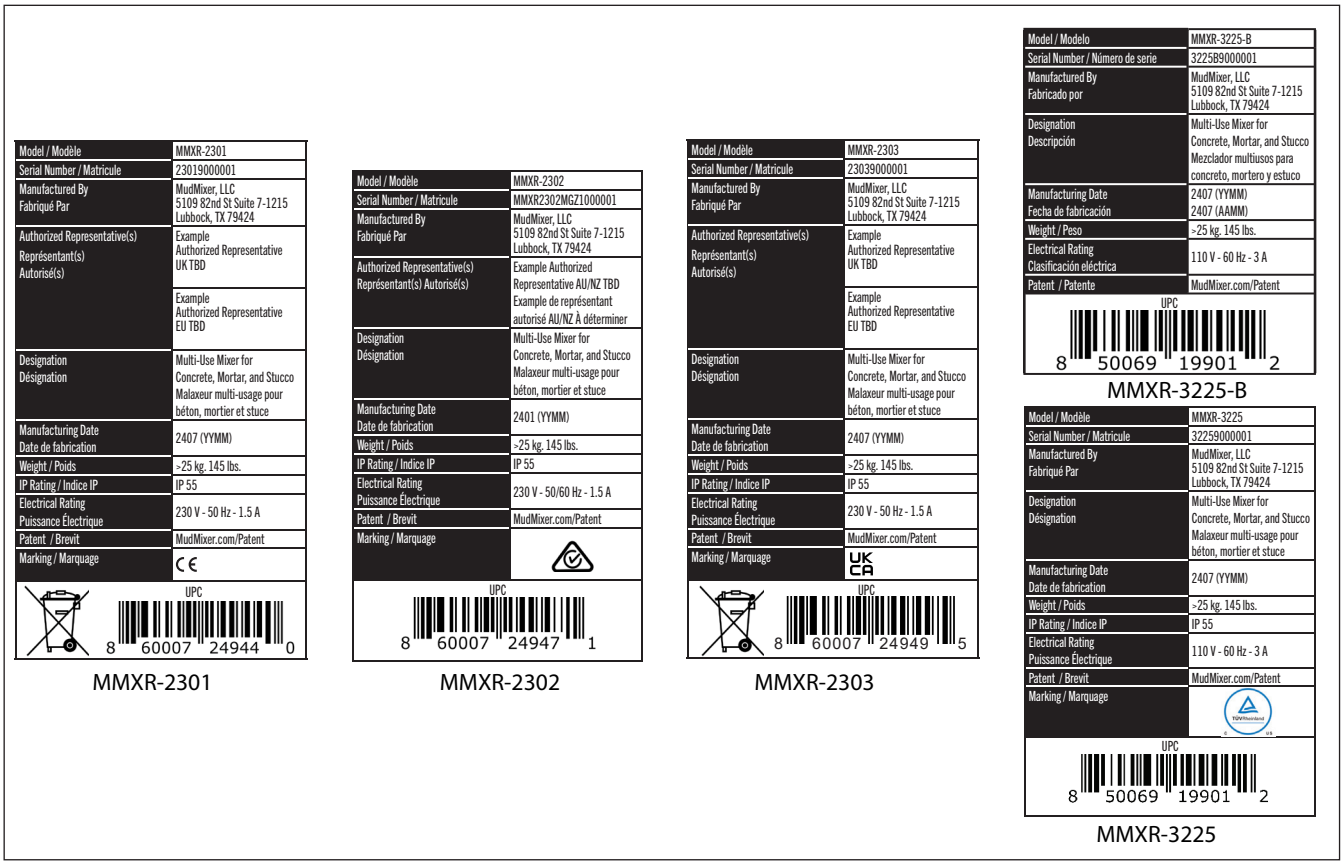

Figure 4. Nameplate Information

Item	Description
Model	Model number.
Serial Number	A unique number assigned to each MudMixer for tracking and record keeping.
Manufactured By	MudMixer contact address.
Authorized Representative	Authorized company that can act on behalf of MudMixer for equipment sales, leasing, and servicing.
Designation	Authorized use of the MudMixer.
Manufacturing Date	Year and month of manufacture.
Weight	The approximate weight of an assembled MudMixer.
IP Rating	Ingress Protection (IP) code indicates level of protection against water and dust. IP55 indicates protection low-pressure water jets from any direction, but it is not fully waterproof. Do not spray water jets directly on the motor and never submerge the MudMixer under water.
Electrical Rating	Voltage, frequency, and current requirements of the incoming power source.
Patent	Link to the list of MudMixer patents.
Marking	CE is the European conformity mark indicating the MudMixer meets European compliance requirements for sale throughout the European Union. UKCA (UK Conformity Assessed) is the England, Scotland, and Wales marking for products distributed in Great Britain. Regulatory Compliance Mark (RCM) is the Australia/New Zealand mark that confirms the MudMixer compliance with requirements for sale in these countries. cTUVus mark indicates compliance with requirements for sale in both the US and Canada. This mark is equivalent to and is a direct replacement of the UL and CSA marks.
UPC Code	A unique scannable code that identifies each product and aids in the tracking and sale of each MudMixer.

Declaration of Conformity

EC DECLARATION OF CONFORMITY OF THE MACHINERY
(MD 2006/42/EC, Annex II, 1, A)

Manufacture's Name: **MudMixer, LLC**

Manufacturer Address: 5109 82nd St
Suite 7-1215
Lubbock, TX 79424, USA
Tel: 806-515-4683
Email: orders@mudmixer.com

European Authorized Representative:

Obelis S.A
Boulevard Général Wahis 53, B-1030 Brussels,
BELGIUM.
Tel: 32 (0) 2 732 5954 Fax: 32 (0) 2 732 60 03

Commercial name: MMXR-2301
Generic denomination and function: Multi-Use Mixer for Concrete, Mortar, and Stucco
Model: MMXR-2301
Type/Batch/Serial number: 23019000000
Description of the machinery: Multi-Use Mixer for Concrete, Mortar, and Stucco

Directive(s) Complied with: European Council Directive on the Safety of

Machine 2006/42/EC `

Restriction of Hazardous Substances Directive:
2011/65/EU

European Harmonized Standards to which Conformity is Declared:
2006/42/EC, 2014/30/EU, 2000/14/EC amended by 2005/88/EC, 2012/19/EU, 2011/65/EU, EN ISO 12100:2010, EN 62841-1:2015+A11, EN IEC55014-1:2021, EN IEC61000-3-2:2019+A1, EN 61000-3-3:2013+A1+A2,EN IEC55014-2:2021

Other Technical standards and specifications used: Not Applicable.

We, the undersigned hereby, declare that the machinery specified above fulfills all the relevant provisions of the European Council Directive 2006/42/EC.

Manufacturer:

Signature: Liam Morel **Date** : 11/26/2024

Full Name and Position: Director of Engineering **Place**: Columbia, TN

MUDMIXER, LLC
MUD MIXER
Established 2018
LUBBOCK, TEXAS

Page 1 out of 1 DOC11.22.0027 V1 09/11/2023

DECLARATION OF CONFORMITY OF THE MACHINERY

(The Supply of Machinery (Safety) Regulations 2008, Part A of Annex II (Part 2 of Schedule 2))

Manufacturer's Name:	**MudMixer, LLC**
Manufacturer Address:	5109 82nd St Suite 7-1215 Lubbock, TX 79424, USA
Tel:	806-515-4683
Email:	orders@mudmixer.com
UK Authorised Representative:	Obelis UK Ltd. Sandford Gate, East Point Business Park, OX4 6LB Oxford, United Kingdom Tel: +44.1491.378012 Email: info@obelis.co.uk
Product's commercial name:	MMXR-2303
Generic denomination and function:	Multi-Use Mixer for Concrete, Mortar, and Stucco
Model:	MMXR-2303
Type	Multi-Use Mixer for Concrete, Mortar, and Stucco
Serial number:	23039000000
Description of the machinery:	Multi-Use Mixer for Concrete, Mortar, and Stucco
Legislation(s) complied with:	The Supply of Machinery (Safety) Regulations 2008 (as amended) The Restriction of the Use of Certain Hazardous Substances in Electrical and Electronic Equipment Regulations 2012

UK Designated Standards to which conformity is declared:
2006/42/EC, 2014/30/EU, 2000/14/EC amended by 2005/88/EC, 2012/19/EU, 2011/65/EU, EN ISO 12100:2010, EN 62841-1:2015+A11, EN IEC55014-1:2021, EN IEC61000-3-2:2019+A1, EN 61000-3-3:2013+A1+A2,EN IEC55014-2:2021

Other technical standards and specifications used: Not Applicable.

We, the undersigned, hereby declare that the machinery specified above fulfills all the relevant provisions of the The Supply of Machinery (Safety) Regulations 2008.

Manufacturer:

Full Name and Position: Director of Engineering Date : 11/26/2024

Place: Columbia, TN Signature: Liam Morel

MUDMIXER, LLC ★ LUBBOCK, TEXAS ★ MUD MIXER Established 2018

22/03/2023, DOC11.24.0003-02

Page 1 out of 1

Component Locations

Overall View

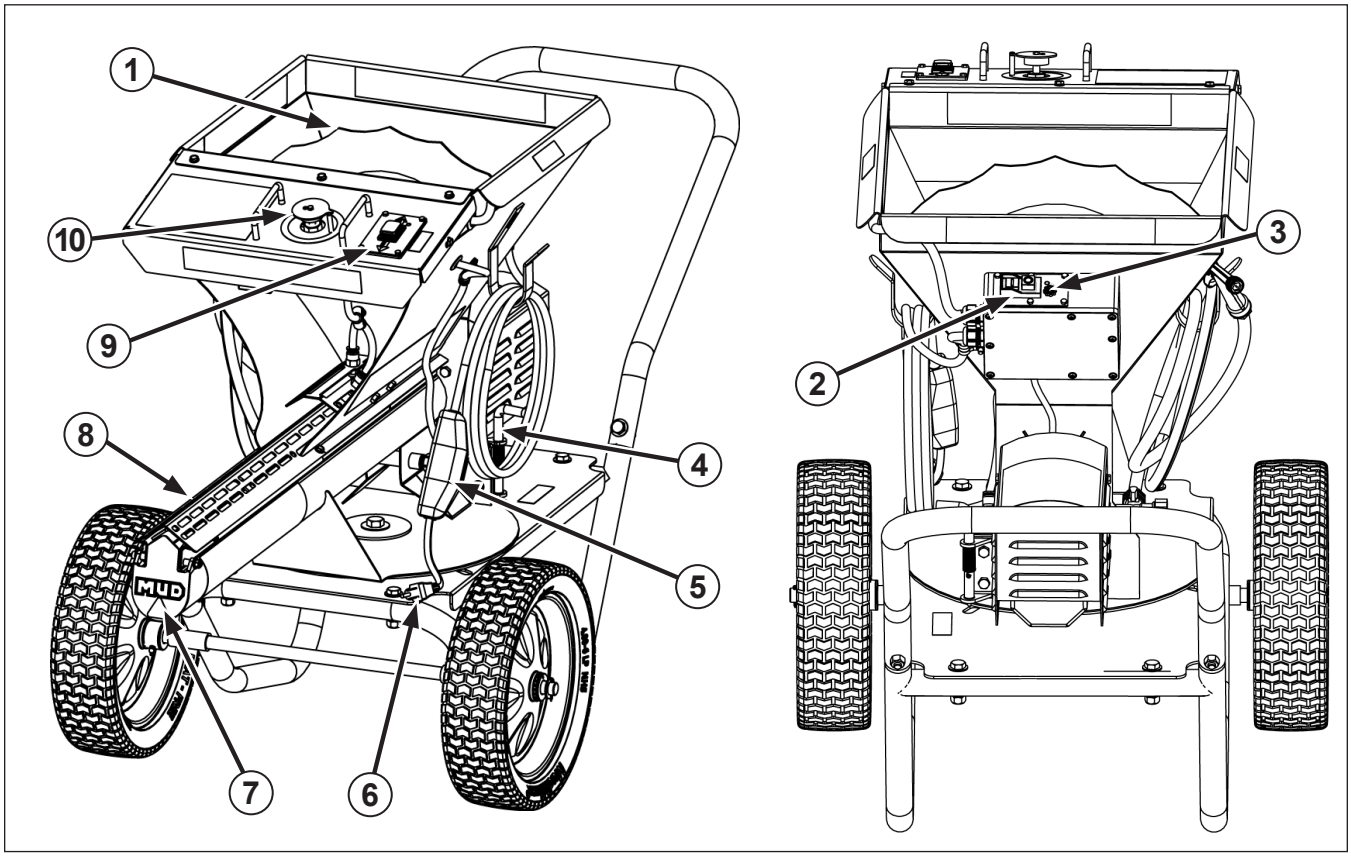

Figure 5. MudMixer Components (1 of 2)

CAUTION

Become familiar with operator controls, machine components, and correct operating procedures before operating.

No.	Item	Description
1	Bag Cutter	Open mix bags by lightly dropping them on the bag cutter.
2	Power On/Off Switch	Use to turn power to the MudMixer On (I) or Off (O). Not present on model MMXR-3225-B.
3	Motor Overload Circuit Breaker	Protects the auger motor from an overload such as a jammed auger. Press down to reset the motor overload breaker. Not present on model MMXR-3225-B.
4	Pivot Latch Pin	Locks the hopper/chute in position on the base.
5	GFCI	Protects against electrical shocks. Automatically cuts off the power when current leakage is detected.
6	Power Cable	Connects to a power source. Supplies power to the auger motor and solenoid valve.
7	Auger Flap	Prevents contact with the rotating auger, but allows free flow of mixed concrete.
8	Chute Auger Guard	Safety guard prevents contact with the moving auger.
9	Auger Forward-Stop-Reverse Switch	Turns the power to auger motor On/Off. Selects either forward or reverse operation of the auger. The forward auger position turns on the water spray into the mixing chute.
10	Water Control Dial	Adjustment dial for amount of water injected into the mixing auger. Clockwise rotation reduces water flow, counterclockwise rotation increases water flow.

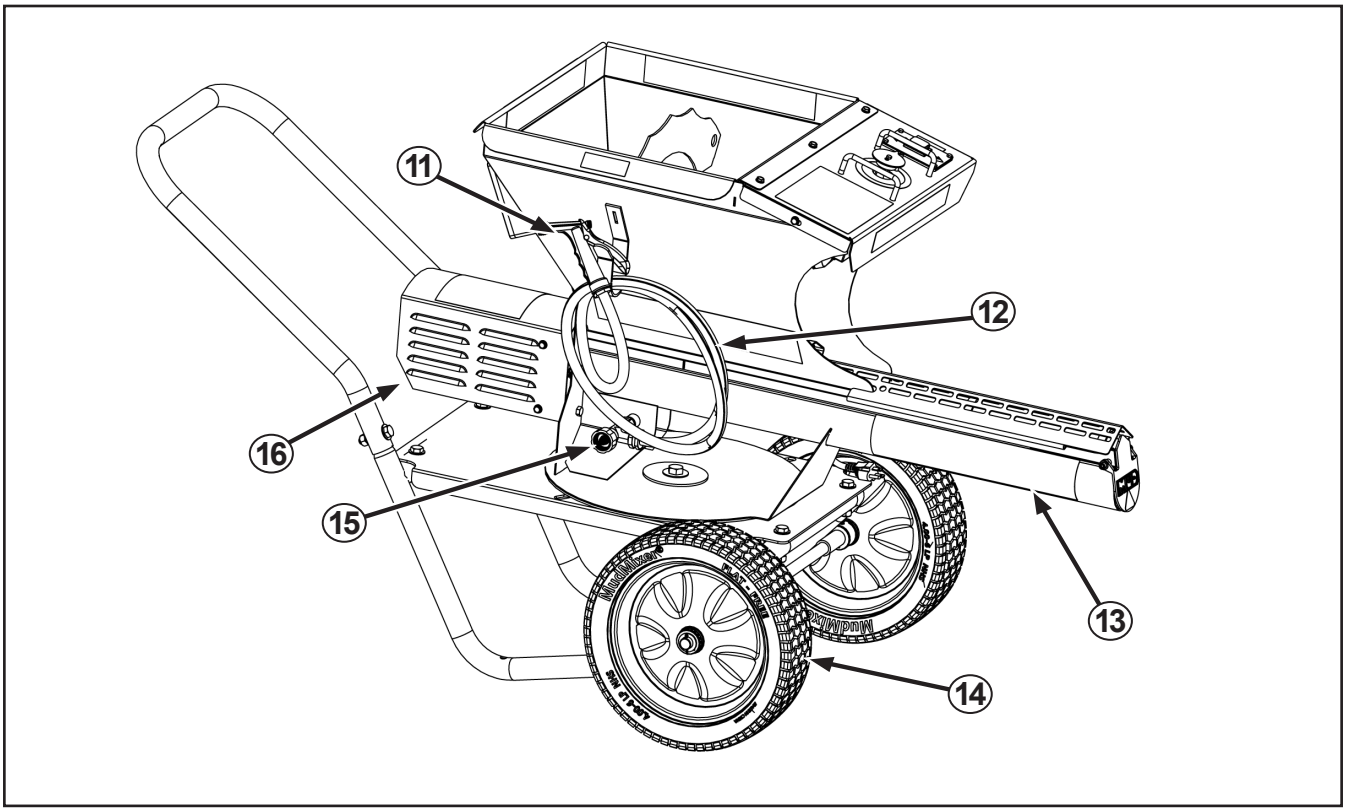

Figure 6. MudMixer Components (2 of 2)

No.	Item	Description
11	Hand Sprayer	Use to clean the MudMixer or to add additional water in the mixing chute. Never spray water into the hopper filled with dry mix.
12	Water Hose	Connects the hand sprayer to the water outlet.
13	Mixing Chute	Keeps the mix in contact with the auger when mixing.
14	Flat Free Tire	Tires that do not require any air and do not go flat if punctured.
15	Water Inlet Connector	Connects to a standard garden hose.
16	Auger Motor	Electric motor that rotates the auger through a gear reduction drive.

Specifications

Details	
Overall Length	66.5 in. (1689 mm)
Overall Width	22.5 in. (571 mm)
Overall Height	35 in. (889 mm)
Chute Height	16 in. (406 mm)
Weight	145 lbs. (66 kg)
Operating Temperature	14°F to 104°F (-10°C to 40°C)
Hopper Capacity	120 lbs. (54 kg)
Body Construction	14 Gauge High-Strength Steel
Frame Construction	1 in. (25.4 mm) Steel Pipe
Tires	Marathon Flat-Free
Minimum Power Cord Gauge	14 Gauge (2 mm^2)
Minimum Generator Output	1 kW
Sound Power Level[1,2]	No Load – 93.2 dB (A) Load – 86.8 dB(A)
Sound Pressure Level[1,2]	No Load – 78.0 dB (A) Load – 74.0 dB(A)

1 Measurement tolerance: 3dB
2 Measured according to UL/EN/IEC 62841-1

Motor	
Motor HP	250 W
Motor Protection Rating	IP55

Electrical	
Electrical Requirements	MMXR-3225: 110 V - 60 Hz - 3 A MMXR-3225-B: 110 V - 60 Hz - 3 A MMXR-2301: 230 V - 50 Hz - 1.5 A MMXR-2302: 230 V - 50 Hz - 1.5 A MMXR-2303: 230 V - 50 Hz - 1.5 A
Cord Length	78 in. (2000 mm)

Safety Features
Hopper Auger Guard
Chute Auger Guard
Grounded Power Cable with GFCI (RCD)
Water-tight electrical boxes and connections

Assembly

Unpacking

⚠ CAUTION

Two people are required to lift the MudMixer shipping carton. Failure to follow safe lifting practices may result in minor or moderate bodily injury.

Unpack the shipping carton(s). Make sure the components required for assembly are available.

NOTE: *All components for MMXR-2301, 2302 & 2303 are shipped within one carton.*

Save a large section of the cardboard shipping carton to use as a protective mat during assembly.

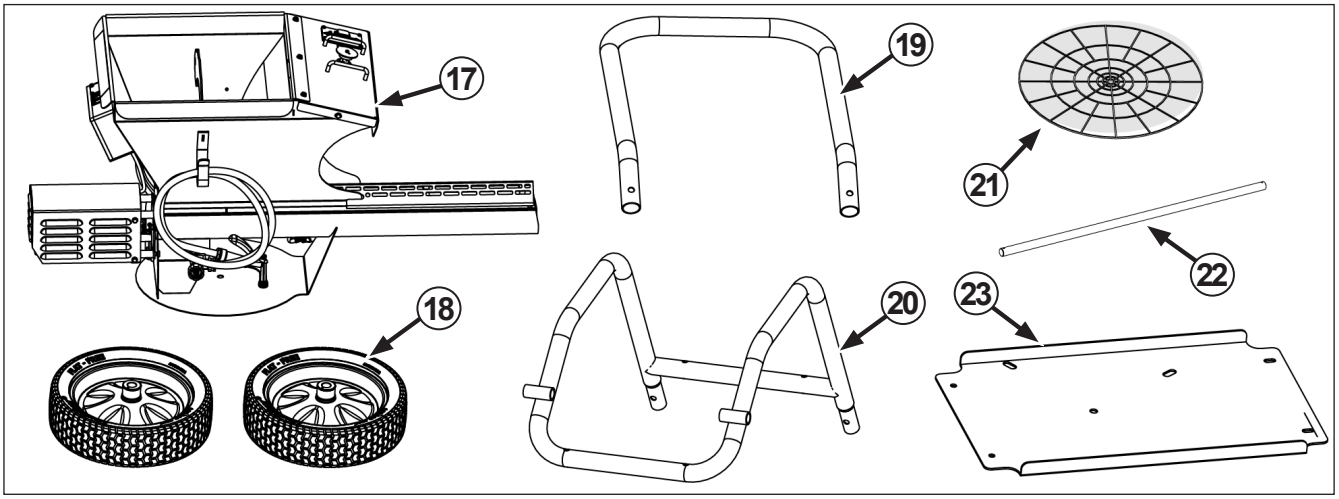

Figure 7. Parts Included

Item	Description	Item	Description	Item		Item	Description
17	Machine Base	19	Handle	21	Circular Pivot Bushing	23	Base Plate
18	Never Flat Wheels	20	Frame Base	22	Axle Shaft		

The shipping carton(s) contain these hardware items:

Item		Item	Qty	Where used
24		Spring	1	Mounting of base plate
25, 26		M14 x 65 Bolt and Nut	1	Mounting of base plate
27		M14 Washer	2	Mounting of base plate
28		Big Washer	1	Mounting of base plate
29, 30, 31		M10 x 50 Bolt, Washer, and Nut	6	Attachment of handle to base frame
32, 33		Axle Washer and Pin	2	Wheel mounting

Tools Required

With its simple assembly, only the following tools are required to assemble the Mudmixer:

Tools Needed:	
1	Adjustable (Channel Lock type) Pliers
2	17 mm Wrench
3	22 mm Wrench

Assembly Steps

CAUTION

Two people are required to lift the MudMixer. The MudMixer base weighs ~ 130 pounds. Failure to use assistance in assembly can cause serious injury and/or damage to the MudMixer.

1. Place the MudMixer base (17) upside down on cardboard or other suitable soft (non-scratch) surface.

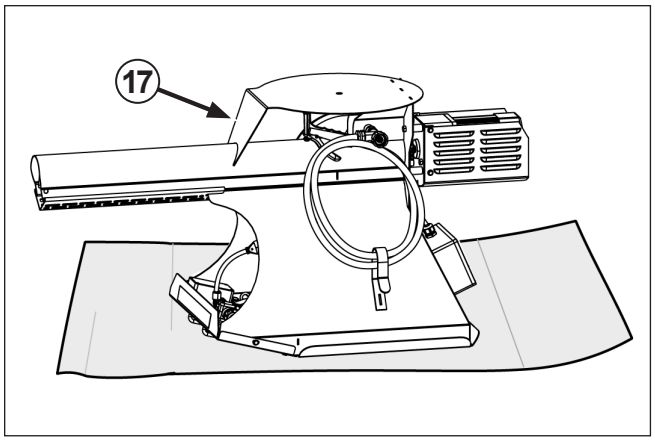

Figure 8. Hopper Upside Down

2. Place the circular pivot bushing (21) on the mixer base with the webbing facing up.

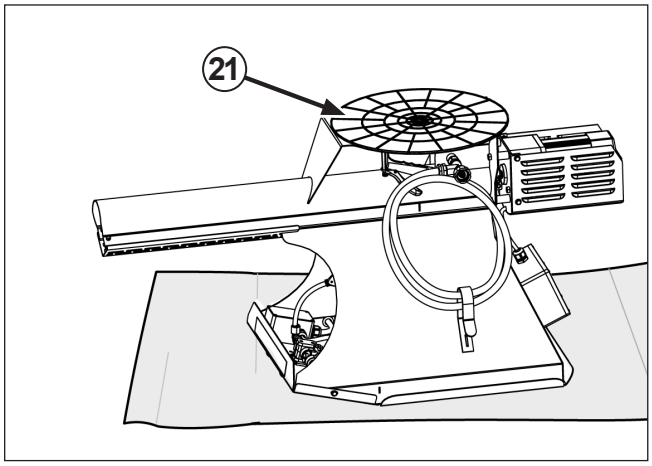

Figure 9. Plastic Bushing

3. Place the base plate (23) on the mixer base. Align the base plate center hole with the plastic bushing center hole and align rotation pivot latch pin (4) and hole (34) in the base plate.

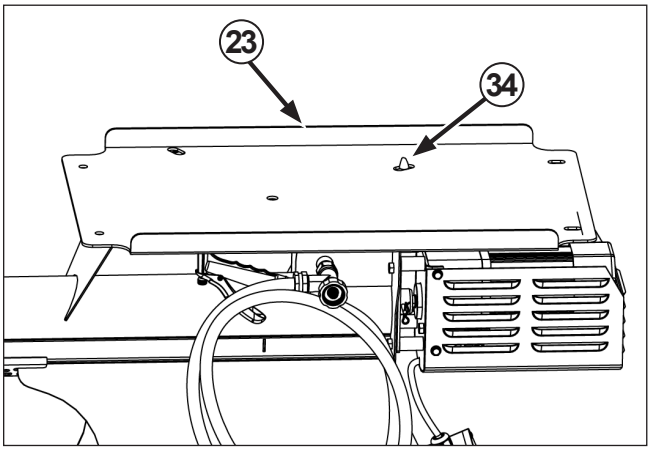

Figure 10. Base Plate

4. Have the hardware needed to install the base plate ready prior to installation. From underneath the base plate, install the large M14 x 65 bolt (26), and one M14 washer (27) and big washer (28) through the center hole in the base plate. Hold the parts in position to install the top-side fasteners.
5. On the top, install the other M14 washer (27), spring (24), and M14 nut (25).

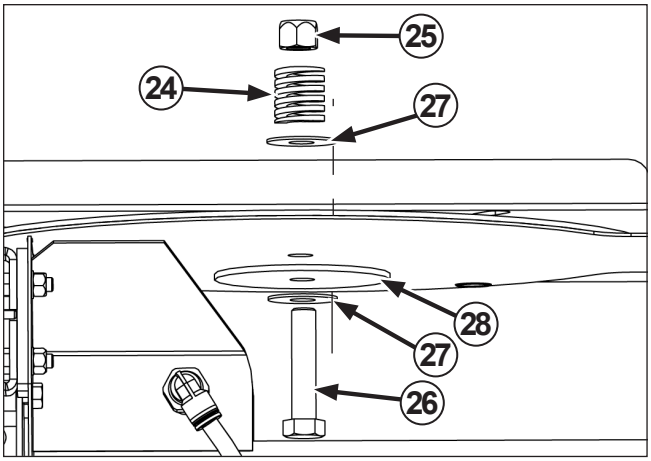

Figure 11. Base Plate Fasteners

6. Tighten the nut until the spring is almost but not completely compressed. There should be some gaps (35) between spring coils

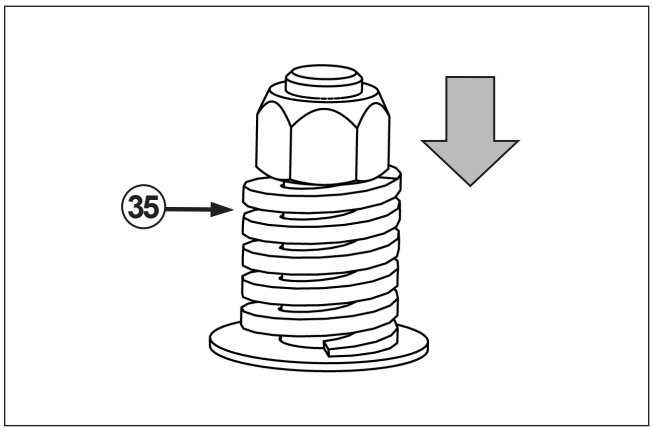

Figure 12. Spring Compression

7. Position the frame base section (20) on the mixer base plate and secure it with four bolts (29), washers (30), and nuts (31).

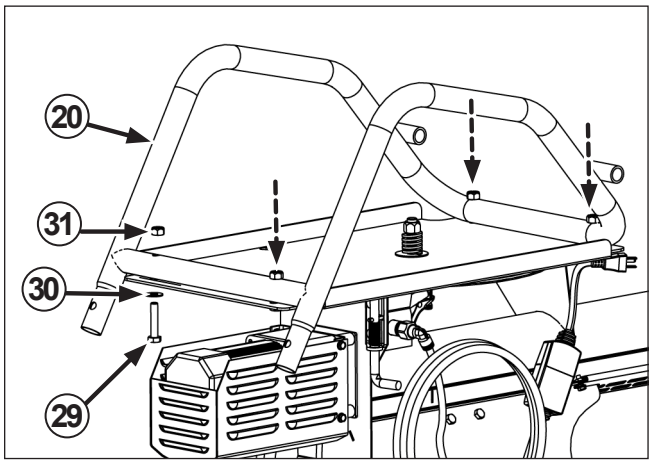

Figure 13. Base Frame Installation

8. Install the frame handle (19) with two bolts (29), washers (30), and nuts (31).

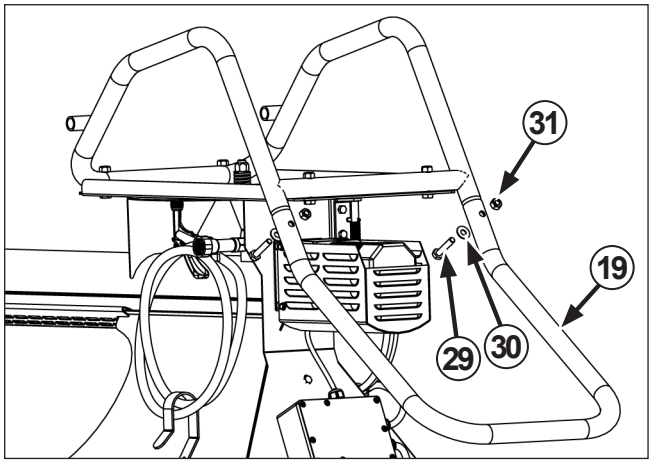

Figure 14. Frame Handle Installation

9. Position the axle shaft (22) in the frame axle brackets. Secure the two wheels (18) with washers (32) and cotter pins (33). Make sure the wheel grease fittings face inside.

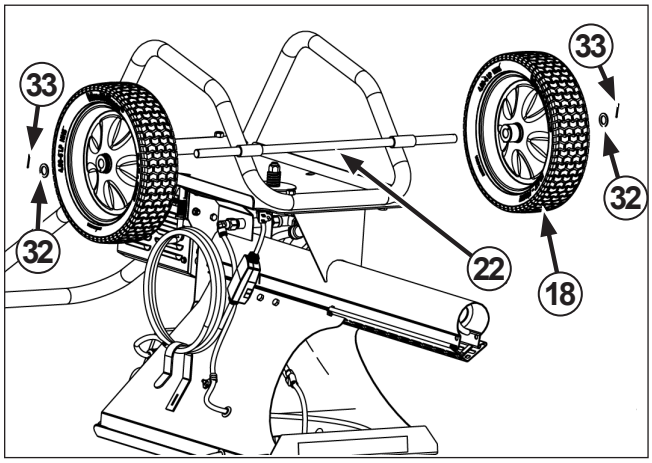

Figure 15. Axle/Wheel Installation.

10. Pivot the frame handle 90 degrees so it is perpendicular to the standard lock position.

11. Use the frame handle to flip the MudMixer on its side. Pull up on the handle to flip the assembled MudMixer up on its wheels.

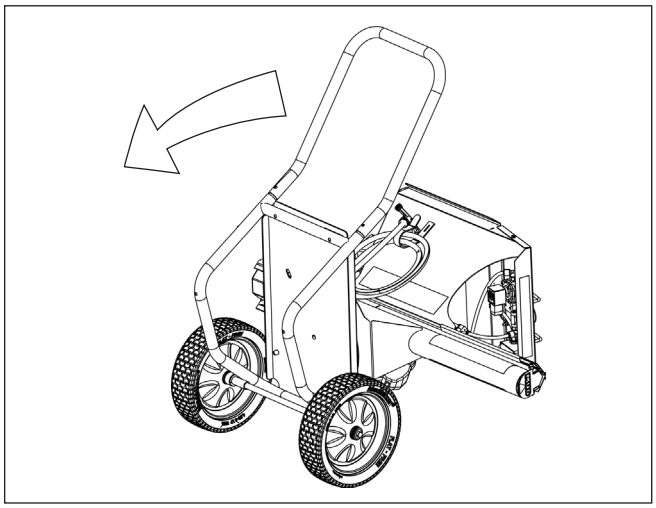

Figure 16. Pivot and Flip MudMixer Up

Operation

1. Properly position the MudMixer on a firm, level work surface.

⚠ WARNING

Tipping hazard. The MudMixer must be placed on a level surface able to support the weight of the MudMixer plus mix. Failure to provide proper support may result in death or serious injury.

⚠ WARNING

The MudMixer is not to be operated by children or people with reduced physical, sensory, or mental capabilities. Children must be be kept a safe distance from the MudMixer while in operation. Failure to take these precautions may result in death or serious injury.

2. Use the two holes (36) in the the MudMixer base frame to anchor the MudMixer. Use suitable staking methods depending on the ground conditions.

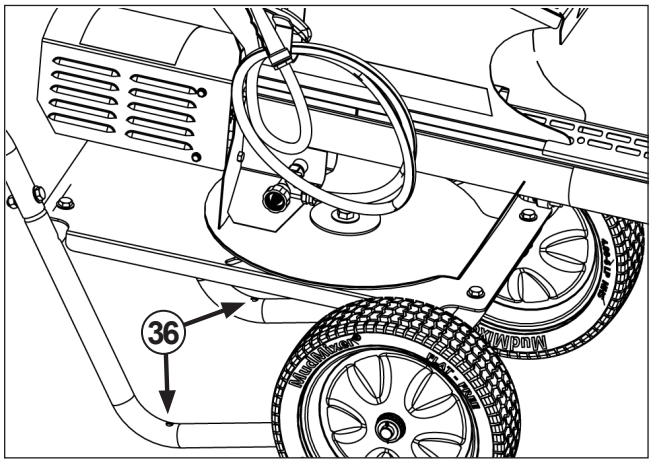

Figure 17. Base Frame Staking Holes

3. To prevent accidental rotation, make sure the pivot pin (4) is locked into the hole on the base plate (34) . Rotate the pivot pin counterclockwise to release it from the latch slot (37) and lower into the hole in the baseplate.

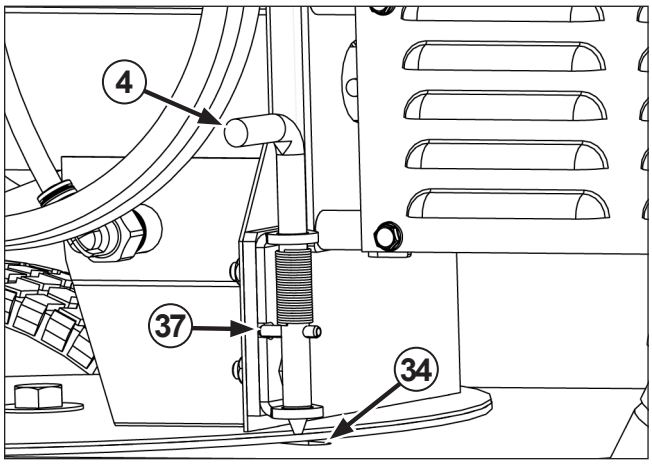

Figure 18. Pivot Pin

4. Set the water dial (38) to the zero (off position).

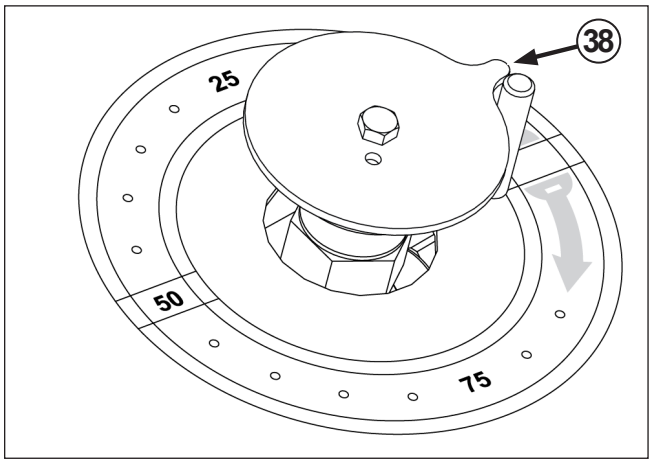

Figure 19. Water Dial

5. Make sure the auger forward-stop-reverse switch (9) is in the middle (Stop position).

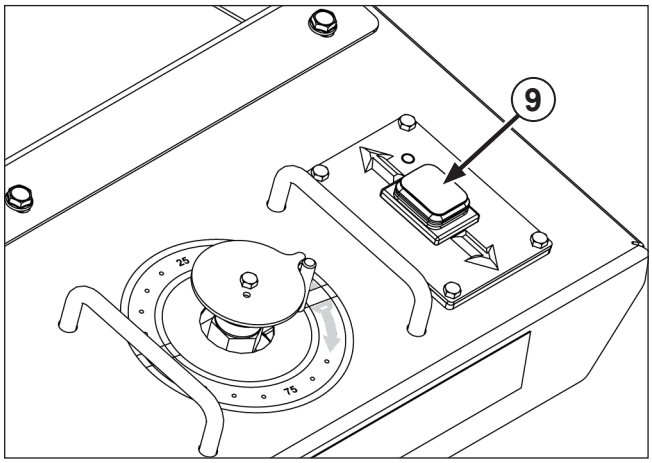

Figure 20. Auger Forward-Stop-Reverse Switch

6. Connect a standard garden hose to the fitting (39) on the water inlet valve (15). Turn on the water supply and water inlet valve. A minimum water pressure of 40 psi is recommended. The maximum permitted water inlet pressure is 80 psi.

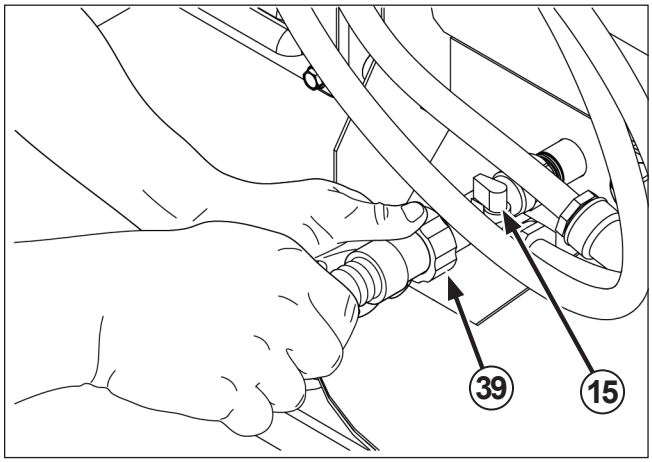

Figure 21. Water Connection

7. Plug the MudMixer power cord into a heavy duty (14 AWG or 2 mm^2 minimum) power supply cord up to 100 ft (30 m):
   - Models 3225 and 3225-B Power Connection: IPX5, Type B, well earthed, 110 VAC 60 Hz
   - Model 2301 Power Connection:IPX5, Type F, well earthed, 230 VAC 50 Hz
   - Model 2302 Power Connection: IPX5, Type I, well earthed, 230 VAC 50 Hz
   - Model 2303 Power Connection:IPX5, Type G, well earthed, 230 VAC 50 Hz

NOTE: *This device must be operated from a socket-outlet with proper earthing (ground) connection. Ensure the power supply connection is protected by a maximum 10 A-rated fuse.*

⚠ WARNING

Power cords are a trip and electrical shock hazard. Keep the power cord clear of the work area to prevent death or serious injury.

8. To protect against shocks, the power cord has a Ground Fault Circuit Interrupter (RCD/GFCI) with test (40) and reset (41) buttons. The reset button should be pressed in and the indicator light (42) on. Use the test button to test before each use to check for proper operation of the GFCI.

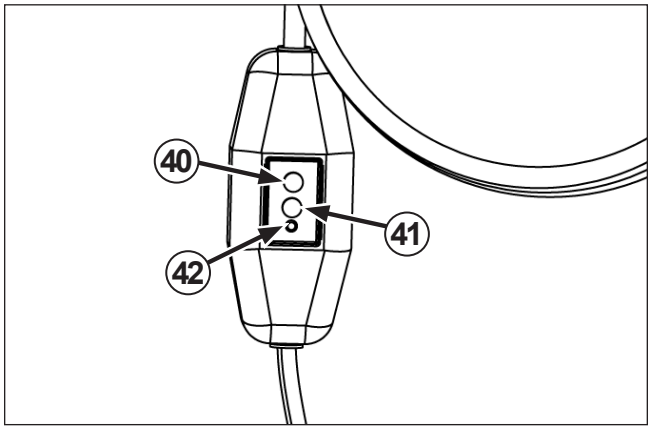

Figure 22. GFCI

⚠ WARNING

Never operate the MudMixer without the RCD (GFCI) provided with the tool. Severe shock or death may occur without the RCD (GFCI).

NOTE: *Step 9 does not apply to model MMXR-3225-B.*

9. Press the power switch position ON (I) button (2). The motor overload breaker (3) should be pressed in.

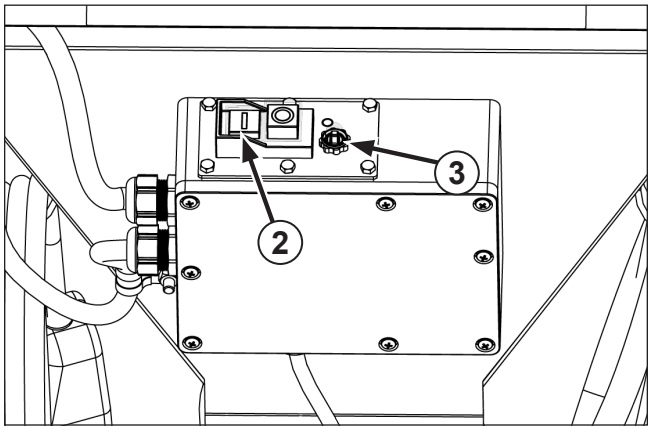

Figure 23. Power Switch

10. Set the water dial to the starting point. An initial set point of 50 (43) is recommended for concrete.

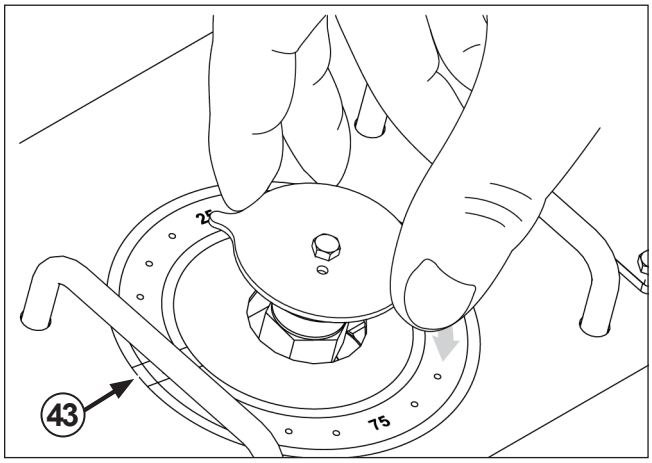

Figure 24. Initial Water Dial Setting

11. Press the auger forward-stop-reverse switch to the forward position (9) for a few seconds and then back to the off position. Make sure the auger turns and water is spraying into the mixing chute.

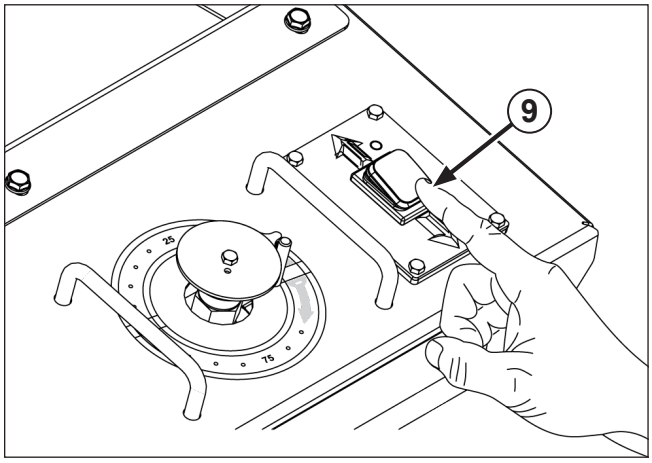

Figure 25. Auger Forward Switch Position

12. Use the auxiliary hose sprayer to wet the mixing chute. Keep the water spray clear of electrical components and away from persons in the work area.
13. Fill the hopper with concrete mix.

CAUTION

During operation, always keep the auger forward-stop-reverse switch and power switch accessible in case of an emergency. Failure to maintain proper control of the MudMixer may result in minor or moderate bodily injury or damage to the MudMixer.

14. Press the auger forward-stop-reverse switch to the forward position to begin mixing concrete.
15. Adjust the water dial to increase or decrease water flow to achieve the desired concrete slump.

NOTICE

It takes about 8 seconds for the effects of any water adjustment to be visible at the end of the mixing chute. Make water adjustments in small increments.

16. Continue to add bags of dry mix to the hopper, keeping the hopper 3/4 full or more.
17. Use the auxiliary spray hose to:
    - Increase water delivery in the mixing chute when necessary. Never spray water into the hopper.
    - Clean the MudMixer.

NOTE: *If the MudMixer should become clogged, see "Unblocking a Blocked Mixing Chute" on page 26.*

CAUTION

Wear the proper eye protection and protective clothing when cleaning the MudMixer to prevent eye injury and skin irritation.

18. When mixing is completed and the hopper is empty, press the auger forward-stop-reverse switch to the off position and then unplug the MudMixer power cord.
19. Use a bucket or direct the mixing chute to a cleanout area to catch any residual mix. Use the auxiliary hose sprayer to clean the hopper and mixing chute.

NOTICE

Avoid spraying directed streams of water on the auger motor. It's best to wipe this area down. The electric auger motor is rated for low pressure water flows not higher pressure directed streams of water.

20. Alternately spray the hopper and mixing chute until the water runs clear out of the MudMixer.
21. Remove the mixing chute and hopper auger guards. See "Unblocking a Blocked Mixing Chute" and "Removing the Auger Guard" on page 26. Thoroughly clean the guards to ensure no residual concrete is remaining.

Winter Storage

If the Mudmixer is being stored in below freezing temperatures, take precautions to to prevent damage:

1. Remove the plastic water line tubing (44) from the left-side water outlet connector.
2. Disconnect the fitting by pushing in on the connector collar (45) while gently pulling out on the tubing.

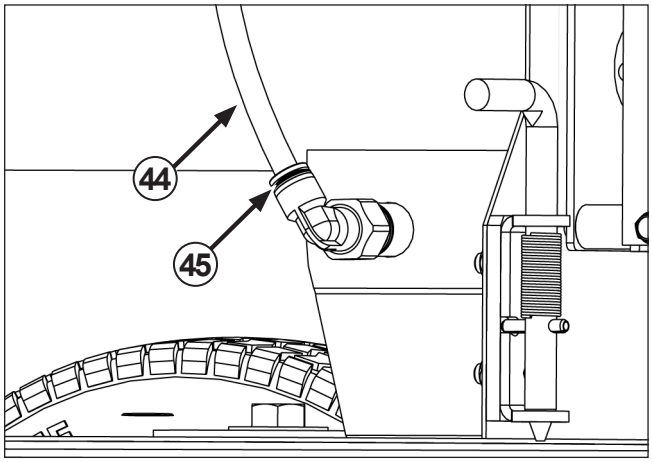

Figure 26. Quick Connect Fitting

3. Turn the water control dial to 100 (maximum water setting).
4. Connect the MudMixer to a power source, turn the power switch on (I), and place the auger forward-stop-reverse switch to the forward position.
5. Use compressed air to blow air through the water lines, both the water outlet connector and water line.
6. Make sure there is no sitting water in the plumbing.
7. Turn the auger forward-stop-reverse switch to the off position and then unplug the power cord.
8. Connect the water inlet tubing by pushing into the tubing connector.
9. Store the MudMixer in a covered, dry location.
10. When the MudMixer is removed from storage, we recommend cleaning the solenoid valve, see page 25.

Transporting the MudMixer

Short Distances

Move the MudMixer short distances using the frame handle and wheels. Be careful of potholes, ruts, bumps, drop-offs, soft or wet ground that may cause a tipover. On steep surfaces travel directly up and down a slope rather than across a slope. Make sure you can maintain control at all times.

By Vehicle

If transporting the Mudmixer by vehicle it must be secured to prevent movement. Proper tie-down will depend on the vehicle/trailer used and available tie-down methods. Use good judgement and check for tightness of tie-downs prior to travel.

WARNING

Failure to properly secure the Mudmixer during transport may result in death or serious injury.

CAUTION

Two people are required to lift the MudMixer. Failure to follow safe lifting practices may result in minor or moderate bodily injury.

Secure the MudMixer using these recommended tie-down points:

- Hopper Bag Cutter (1) Holes
- Frame Handle (19)
- Frame Base (20)

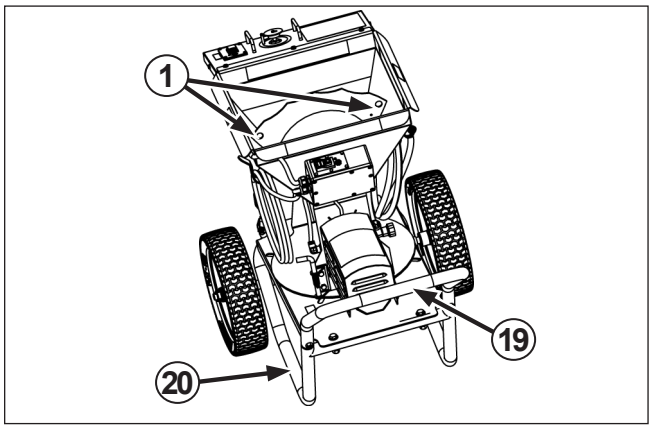

Figure 27. Recommended Tie-Down Points

Do not use the mixing chute, axle shaft, motor housing, hose/cable hooks, and electrical boxes as lifting or tie-down points.

Operating Problems/Solutions

Use the following chart to identify and help resolve issues which may occur.

WARNING

Disconnect all sources of supply voltage before checking components for problems. Failure to disconnect the supply voltage can result in electrical shock and can cause serious injury or death.

Problem	Possible Causes	Corrective Action
Auger Doesn't Rotate Motor Not Running	No source power.	Check the power cord for the MudMixer to make sure power is going to the cord connector using an electrical tester or by plugging in another electrical item.
	Power switch not in On position.	Make sure power switch is in the On (I) position.
	Motor overload breaker tripped.	Press down on the circuit breaker to reset it.
	GFCI tripped.	1. Press the reset button on the ground fault circuit interrupter. 2. Recheck for power at the power cord end.
	Auger power switch not fully in the Forward position.	Flip the auger power switch back and forth between Forward, Off, and Reverse positions.
	Auger jammed.	1. Flip the auger power switch back and between Forward to Reverse. 2. Turn off power and clean auger using the hand sprayer. Look for rocks or other debris that could cause the jam.
Auger Doesn't Rotate Motor Running	Motor to auger shear pin is broken.	Contact MudMixer for a replacement pin and instructions.
Water Doesn't Spray in Mixing Chute	Water supply not on.	Check the source water hose for volume and pressure of water.
	Water inlet valve not in on position.	Turn the water inlet valve so the valve handle is in line with the valve body.
	Water dial set to zero.	Set the water control dial to it's maximum setting.
	Solenoid valve not operating correctly.	Clean the solenoid valve.
Mixing Chute Clogs	Not enough water in mix.	Check the water setting and verify suitable water spray into the mixing chute.
	Mix has debris or pieces of set concrete.	Keep the mix dry, check for large chunks of set concrete or other debris.
Hard to Rotate Chute	Compression spring set too tight.	The spring should be tightened less than it's maximum compression. See assembly instructions.
	Dirt between base plate and plastic bushing.	Use the hand sprayer to clean while pulling/pushing up and down and rotating the frame handle.
	Pivot pin not latched in the up (unlocked) position.	Pull up on the pivot pin and latch it into the retaining slot.

Maintenance

Lubrication

Lubricate the wheels with a general purpose grease every 20 hours of use, Use a grease gun to apply grease (45) until grease is expelled from the wheel hub. Wipe off excess grease.

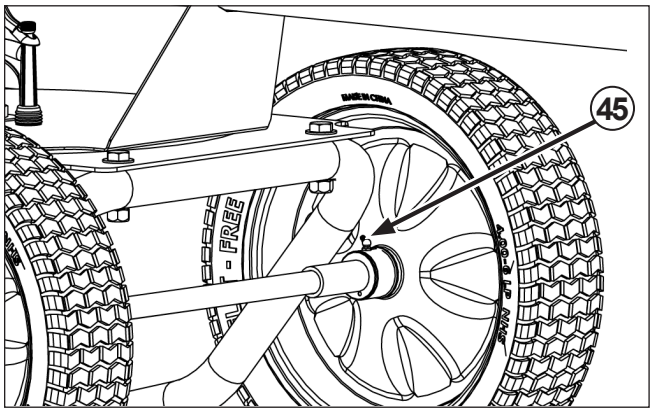

Figure 28. Wheel Lubrication Fitting

Solenoid Maintenance

MudMixer recommends disassembling and cleaning the solenoid every month of use or before operation after an extended storage (more than 6 months). This will ensure proper functioning of your MudMixer.

Solenoid Disassembly

WARNING

Disconnect all sources of supply voltage before servicing. Failure to disconnect the supply voltage can result in electrical shock and can cause serious injury or death.

1. Use an M5 Allen wrench to remove the four fasteners (46, top two shown) that secure the solenoid body (47) to the valve body (48).

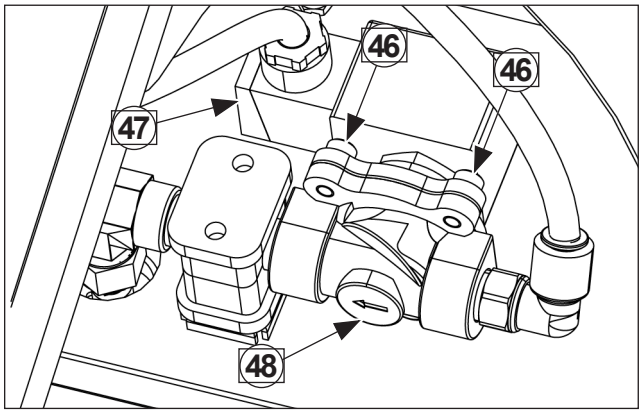

Figure 29. Solenoid Valve

NOTE: *One of the fasteners secures the ground wire, note the position for installation.*

2. Remove the solenoid diaphragm assembly (49) and spring (50).
3. Using a penetrating fluid, remove corrosion and thoroughly clean all components of the solenoid.

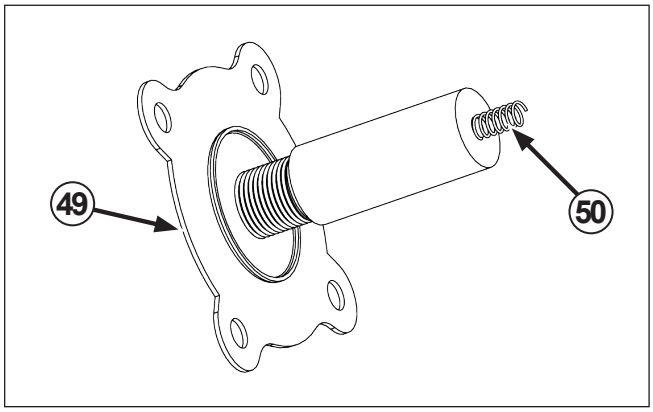

Figure 30. Plunger and Spring

Solenoid Assembly

1. Install the diaphragm assembly (49) with the spring (50), into the solenoid body (47).
2. Install the solenoid body on the valve body (48) and hand tighten the four fasteners (46).

NOTE: *Install the solenoid valve ground wire as noted during removal under one of the fasteners.*

3. To maintain a good seal and prevent deformation of the rubber diaphragm, tighten fasteners (46) in two steps using a crisscross pattern. Do not overtighten fasteners.

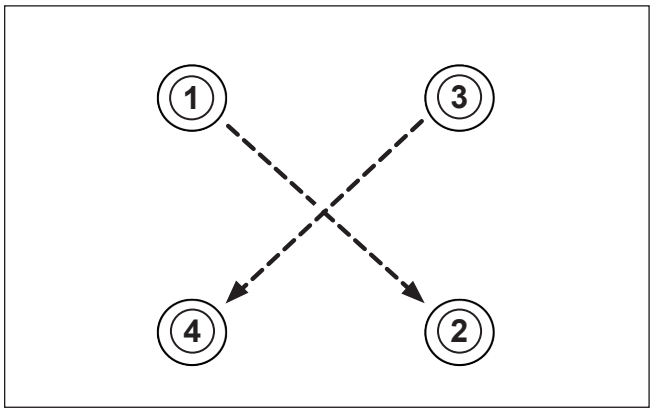

Figure 31. Solenoid Tightening Pattern

Unblocking a Blocked Mixing Chute

Should the mixing chute become clogged:

1. Move the auger forward-stop-reverse switch between the forward and reverse positions to work the blockage loose.
2. Spay the mixing chute with water and try again to work the blockage loose.
3. If the mixing chute remains clogged, disconnect the power cord from the MudMixer.

WARNING

Never attempt to remove a blockage with the power cord attached to the MudMixer, even if the power switch is off. Failure to disconnect the power cord may result in electrical shock, serious injury or death.

CAUTION

Wear protective gloves when handling MudMixer mixing chute components. Sharp edges may cause cuts.

4. Remove the bolt or pin (51) securing the chute auger guard

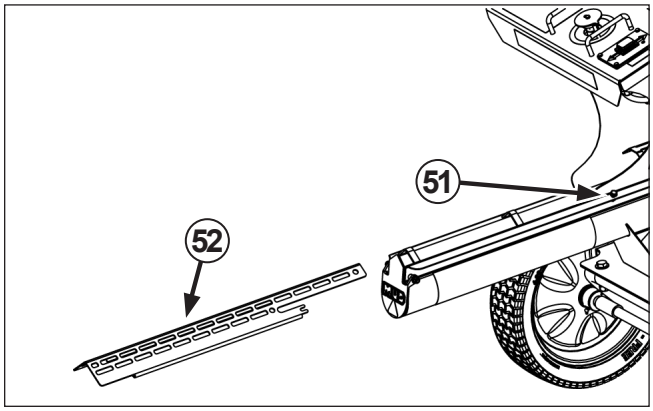

Figure 32. Auger Mixing Chute Guard

5. Slide the auger guard (52) off the mixing chute.
6. With the auger exposed, remove the blockage. Spray the mixing chute with water to clean it.
7. Slide the auger guard on the mixing chute.
8. Install the bolt or pin (51). Tighten bolt securely.

Removing the Auger Guard

WARNING

Never attempt to remove the auger guard with the power cord attached to the MudMixer, even if the power switch is off. Failure to disconnect the power cord may result in electrical shock, serious injury or death.

Should it become necessary to remove the auger guard for cleaning:

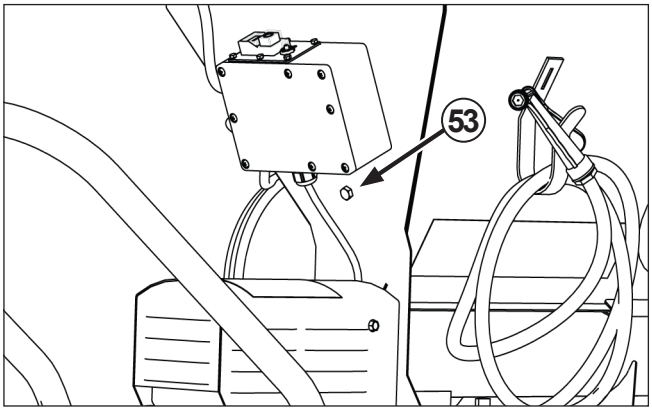

Figure 33. Auger Guard Retaining Bolt

1. Loosen retaining bolt (53) until the auger guard (3) can be removed..

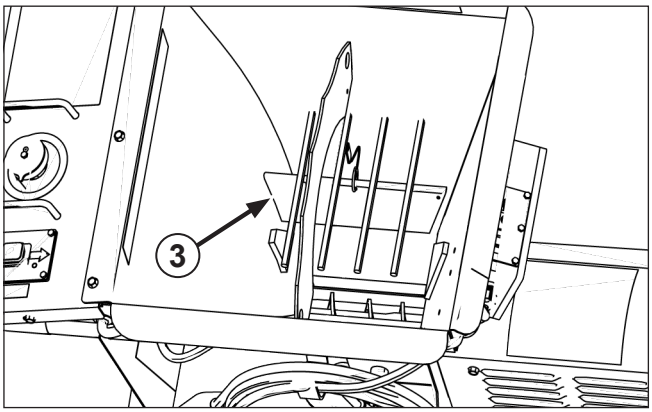

Figure 34. Auger Guard Removal

2. Tilt up and remove the auger guard.
3. To install the auger guard, place it in position and tighten retaining bolt (53).

Cleaning the Motor Grate

WARNING

Never attempt to clean the motor grate with the power cord attached to the MudMixer, even if the power switch is off. Failure to disconnect the power cord may result in electrical shock, serious injury or death.

Check and clean the motor grate once a month:

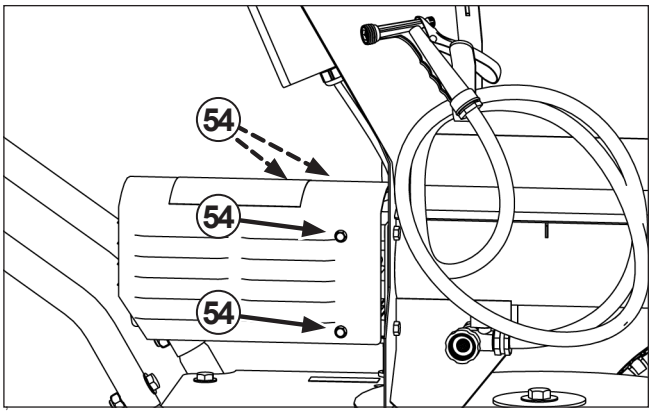

Figure 35. Motor Cover

1. Remove four fasteners (54), there are two on each side of the motor cover (55).

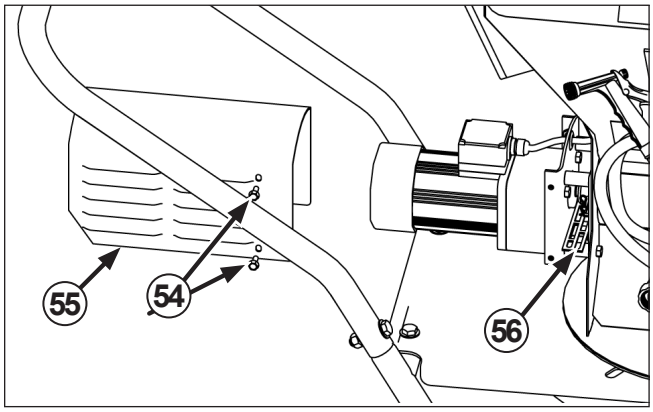

Figure 36. Motor Grate

2. Slide motor cover (55) off the motor.
3. Clean the motor grate (56) of any concrete residue.
4. Install the motor cover and four fasteners.

Power Cord Repairs

WARNING

Replacement or repair of the power cord must be performed by MudMixer or an authorized representative. Improper repairs may result in electrical shock, serious injury or death.

If the MudMixer power cord or connector is damaged and must be repaired or replaced, these repairs must be done by MudMixer or an authorized service center.

Contact MudMixer for a service location near you.

Warranty

The **MudMixer®** Company promises to supply replacement parts for the **MudMixer®** product if it is defective in materials or workmanship for the period listed below.

Two (2) years for any unit used for any purpose including personal, family, or household use, rental, or commercial.

This warranty extends to the original retail purchaser only and commences on the date of the original retail Purchase.

Any part of this product manufactured or supplied by **MudMixer®** and found in the reasonable judgment of the **MudMixer®** Company to be defective in material or workmanship will be repaired or replaced without charge for parts and labor by the **MudMixer®** company or an authorized dealer.

The product, including any defective part, must be returned to the **MudMixer®** company or to the authorized **MudMixer®** dealer where the item was purchased within the warranty period. The expense of delivering the product to the dealer for warranty work and the expense of returning it back to the owner after repair or replacement will be paid by the owner. The **MudMixer®** company's responsibility with respect to claims is limited to making the required repairs or replacements and no claim of breach of warranty should be cause for cancellation or rescission of the contract of any **MudMixer®** brand product. Proof of purchase will be required by the end user to substantiate any warranty claim before warranty work must be performed by the MudMixer® Company.

This warranty is limited to two (2) years from the date of original retail purchase for any **MudMixer®** brand product that is used for rental or commercial purposes, or any other income producing purpose. This warranty does not cover any **MudMixer®** brand product that has been subject to misuse, neglect, negligence, or accident, or that has been operated in any way contrary to the operating instructions as specified in the operator's manual. This warranty does not apply to any damage to the product that is the result of improper maintenance or to any product that has been altered or modified. The warranty does not extend to repairs made necessary by normal wear or by the use of parts or accessories which are either incompatible with the **MudMixer®** product or adversely affect its operation, performance, or durability.

The **MudMixer®** company reserves the right to change or improve the design of any **MudMixer®** brand product without assuming any obligation to modify any product previously manufactured.

The warranty applies only if you perform the routine maintenance specified in the Operator's Manual.

MudMixer® makes no other express warranty.

CONSUMER RIGHTS UNDER LOCAL LAW

This limited warranty is provided in addition to, and does not exclude, restrict, or modify, any statutory rights or remedies that may be available to you under applicable local consumer protection laws. Where local laws (including but not limited to consumer guarantees in Australia, statutory warranties in the European Union, or similar protections elsewhere) provide for non-excludable rights, those rights take precedence over any conflicting terms in this warranty.

To the extent any provision of this warranty is inconsistent with such mandatory rights, that provision shall be read down, interpreted, or severed as necessary to ensure compliance with applicable law.

ALL IMPLIED WARRANTIES ARE LIMITED IN DURATION TO THE STATED WARRANTY PERIOD. ACCORDINGLY, ANY SUCH IMPLIED WARRANTIES INCLUDING MERCHANTABILITY, FITNESS FOR A PARTICULAR PURPOSE, OR OTHERWISE, ARE DISCLAIMED IN THEIR ENTIRETY AFTER THE EXPIRATION OF THE WARRANTY PERIOD. MUDMIXER'S OBLIGATION UNDER THIS WARRANTY IS STRICTLY AND EXCLUSIVELY LIMITED TO THE REPAIR OR REPLACEMENT OF DEFECTIVE PARTS AND MUDMIXER DOES NOT ASSUME OR AUTHORIZE ANYONE TO ASSUME FOR THEM ANY OTHER OBLIGATION. SOME JURISDICTIONS DO NOT ALLOW LIMITATIONS ON HOW LONG AN IMPLIED WARRANTY LASTS, SO THE ABOVE LIMITATION MAY NOT APPLY TO YOU. MUDMIXER ASSUMES NO RESPONSIBILITY FOR INCIDENTAL, CONSEQUENTIAL, OR OTHER DAMAGES INCLUDING BUT NOT LIMITED TO, EXPENSE OF RETURNING THE PRODUCT TO THE MUDMIXER COMPANY OR AN AUTHORIZED MUDMIXER SERVICE CENTER OR EXPENSE OF DELIVERING IT BACK TO THE OWNER, MECHANICS TRAVEL TIME, TELEPHONE CHARGES, RENTAL OF A PRODUCT DURING THE TIME WARRANTY SERVICE HAS BEEN PERFORMED, TRAVEL, LOSS OR DAMAGE TO PERSONAL PROPERTY LOSS OF REVENUE, LOSS OF USE OF THE PRODUCT, LOSS OF TIME, OR INCONVENIENCE. SOME JURISDICTIONS DO NOT ALLOW THE EXCLUSION OR LIMITATION OF INCIDENTAL OR CONSEQUENTIAL DAMAGES, SO THE ABOVE LIMITATION MAY NOT APPLY TO YOU.

For additional questions regarding warranty terms and conditions, you may contact the MudMixer® Company at:

MudMixer®

www.mudmixer.com | (806) 515-4683

Accessories

Hopper Extension

The MudMixer Hopper Extension brings the full capacity of the machine to 300 pounds of mix compared to the 120 pound capacity of the standard hopper.
Dimensions: 21.25 in. x 20.5 in. x 7.75 in.
540 mm x 520 mm x 197 mm

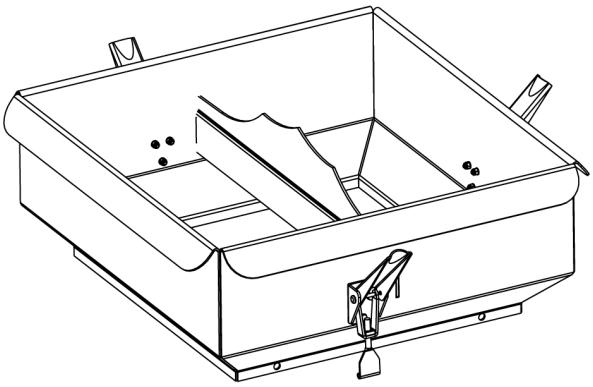

Chute Extension

The Chute Extension provides an additional 18 in. (457 mm) of reach for those hard-to-access areas. The Chute Extension also allows for more accuracy and less splashing while delivering your mix.

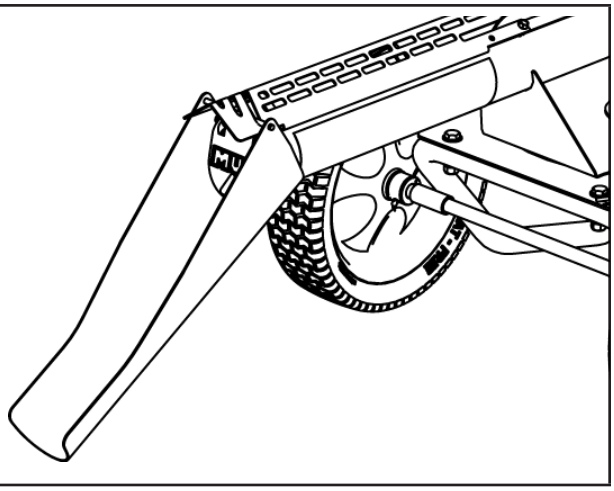

All Weather Cover

The MudMixer All-Weather Cover provides your MudMixer with protection against the elements while transporting, storing, or sitting on the job site. This lightweight, durable cover easily slips on your MudMixer and comes equipped with two straps/ buckles that tightly secure it to the machine.

Made with heavy duty polyester, coated with PVC to repel the elements.

Installing the Chute Extension

1. Disconnect the power cord from the power source.
2. Remove bolt or pin (51) and slide the auger guard (52) to its forward position. Install the bolt or pin (51) to secure the guard. Tighten bolt securely.

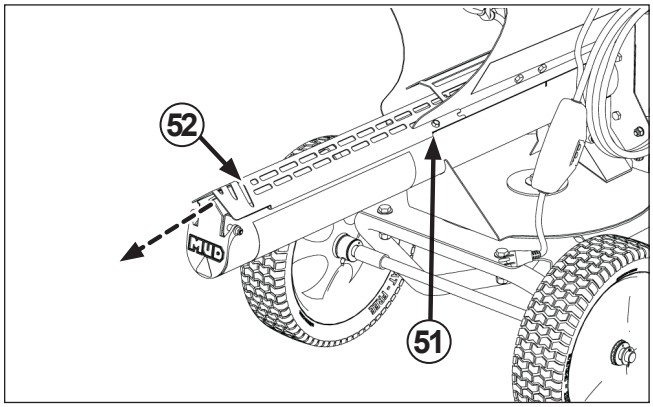

Figure 37. Extend Auger Mixing Chute Guard

3. Depending on the desired extension chute angle, place the chute extension (53) in one of the three slots (54) on the front of the auger guard.

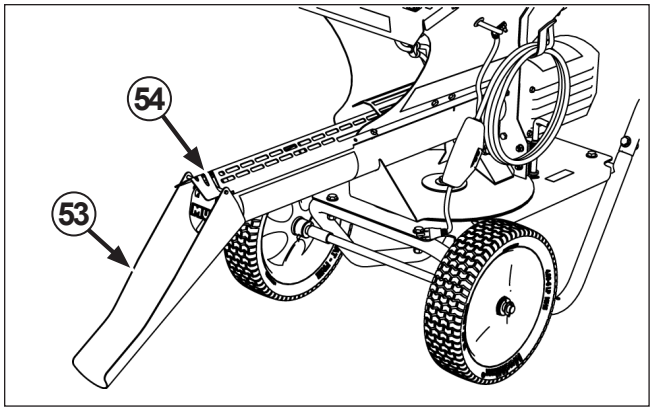

Figure 38. Set Chute Extension Angle

MUD MIXER®

MudMixer, LLC
5109 82nd Street, Suite 7-1215, Lubbock TX 79424, United States
Phone Number: 806-515-4683
Email: orders@mudmixer.com

Obelis UK
Sandford Gate
East Point Business Park
OX4 6LB
Oxford, United Kingdom

Obelis EU
Boulevard Général Wahis, 53
1030 Brussels, Belgium

MudMixer Australia
2/12 Fogarty St.
North Melbourne VIC 3051, Australia